Part No.: 908538

PRESIDENT WORK LIGHT 2.0 24W RED

WIRING INSTRUCTIONS

- *BLACK: + POSITIVE (WORK LIGHT)*
- *WHITE: - NEGATIVE*
- *YELLOW: + RED POSITION LIGHT*

ADDITIONAL INFORMATION

INCLUDED IN PACKAGE: BRACKET
TYPE OF CONNECTION: 200cm loose Cable
WIRE SIZE: 0.75mm²

TECHNICAL DRAWING

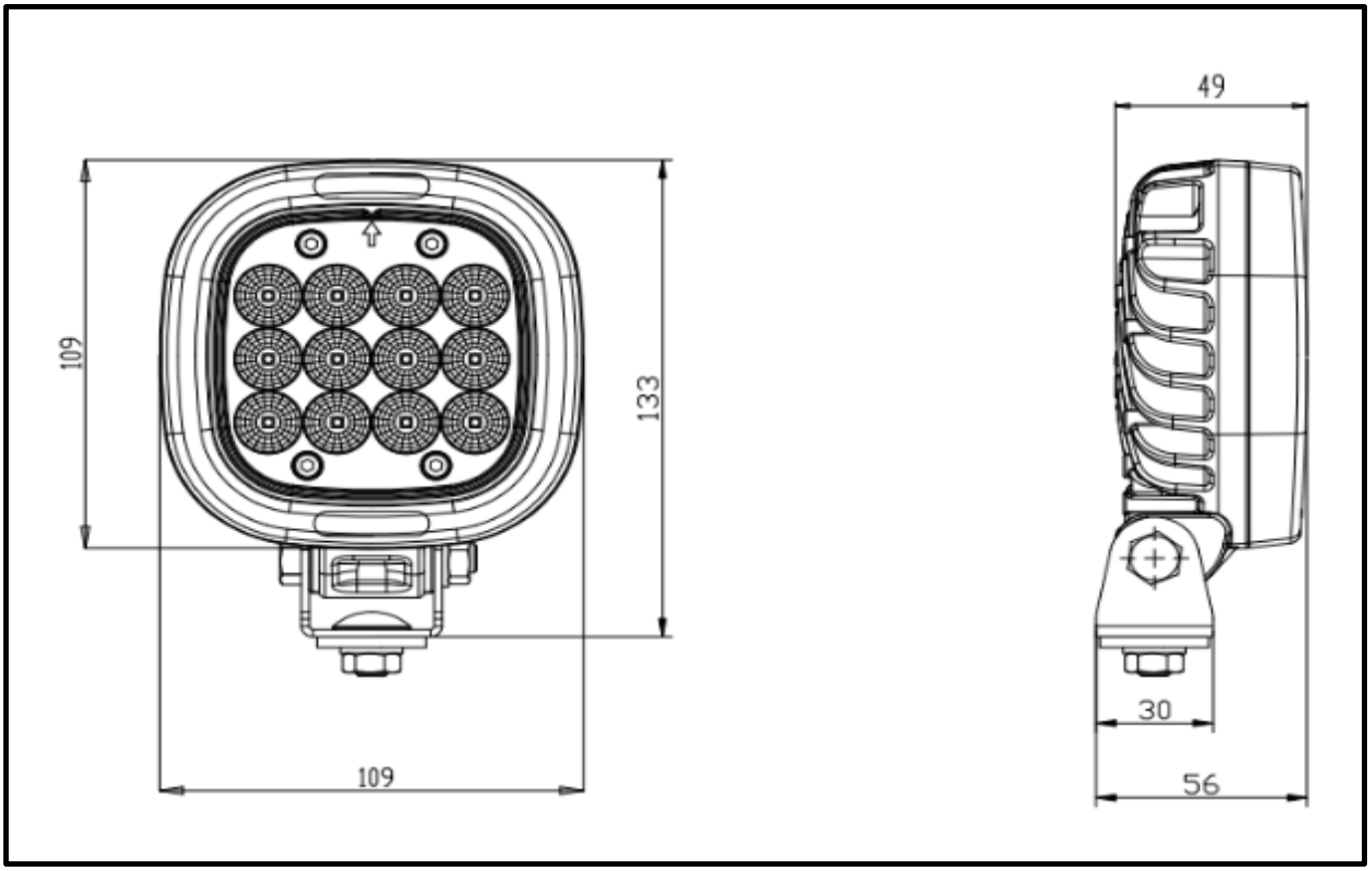

**To claim your Freedom 5-year warranty, please retain your manual, purchase invoice.Without this information, the warranty may be voided. Link*

READ ALL THE INSTRUCTIONS AND STUDY THE DIAGRAMS BEFORE INSTALLING NEW LIGHT!

LEGAL MOUNTING

- Please check state and local laws for proper usage and mounting. Strands will not be responsible for products mounted incorrectly or in violation of local laws (e.g., ECE R48 regulation for the EU)

PRODUCT CARE

- Clean the product with lukewarm water and an alkaline degreaser. Avoid strong chemicals; rinse immediately if exposed. Do not use a pressure washer for cleaning.
- Take care if your light has a breather. Ensure it is protected against rain and dust, especially if it has a sticker breather. Damage to the breather due to incorrect installation will void the warranty.
- Internal moisture is normal and will dissipate through the breather vent after several days of use.
- We do not recommend painting the product housing. If paint is still applied, please ensure the breather is protected and an oven is not used for curing the paint. Otherwise, the warranty might be void.

INSTALLATION

- Ensure power is turned off during installation.
- Do not cut the connector cable to less than 50 cm. If the original cable is already shorter than 50 cm, leave it as is. Otherwise, the warranty will be void.
- Make sure to use only the correct accessories included in the package. Installation errors may void the warranty.
- Tighten screws, washers, and nuts to prevent them from loosening or chafing. Do not overtighten screws to avoid damaging the product's protective components.
- Use a watertight solution for wiring connections.

WARNING!

- For safe operation, use only the voltage specified in the product description. This light becomes hot under continuous use. Do not remove or touch the casing for at least 30 minutes after turning the lamp off

Contact us if you need support: support@strands.se or +46(0)320-450450
Please also refer to the FAQ section on our website for more information.

www.strands.se
www.strandseurope.com